QUICK START GUIDE

Neomow X 2

Robotic Lawn Mower

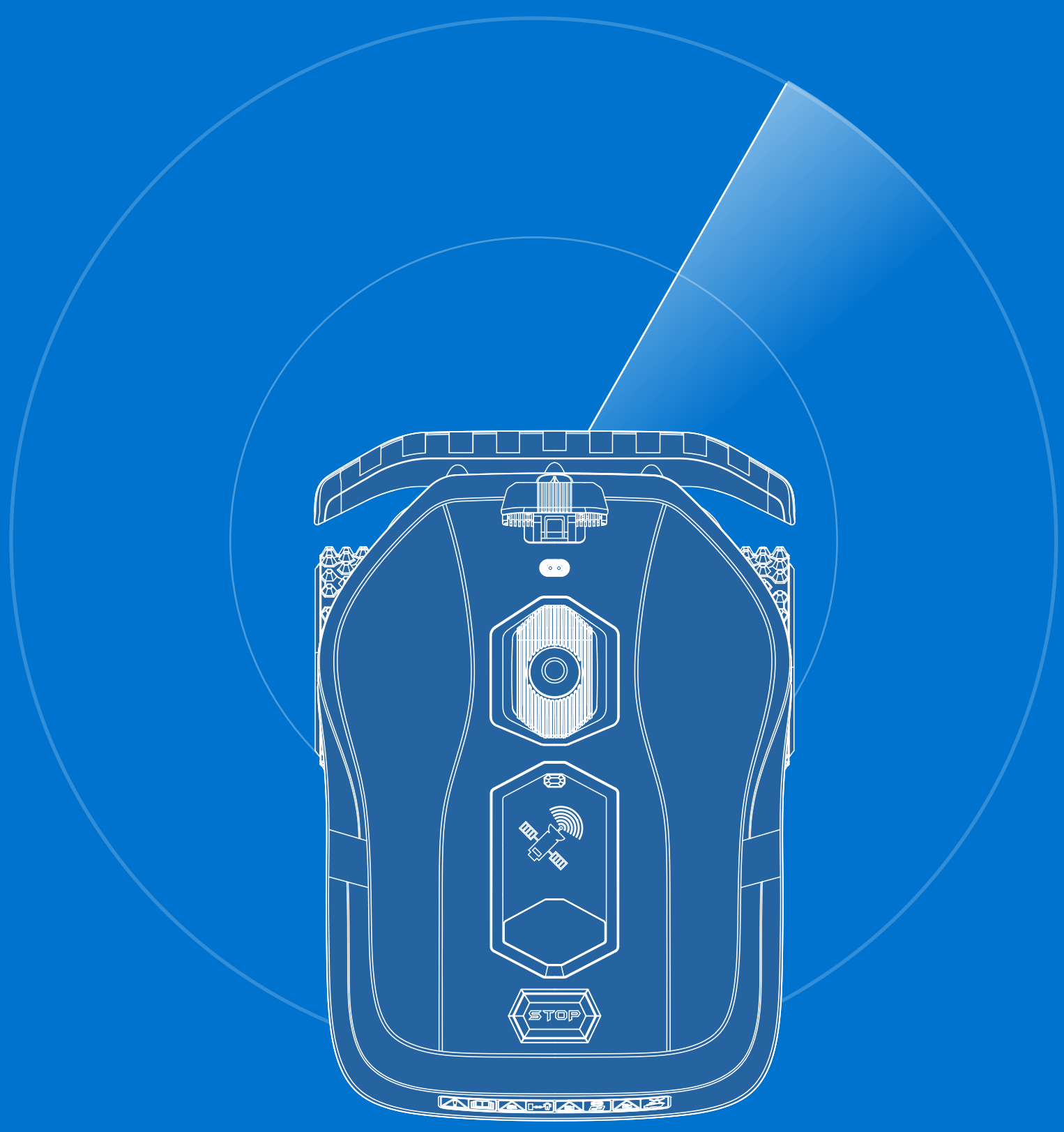

ORCA INNOVATION TECHNLOGY CO., LTD

https://hookii. com

info@hookii. com

Room 523, Building 10 (Tower B), Shenzhen Bay Science and Technology Eco-park No.10,Nanshan District, Shenzhen, China

PACKAGING LIST

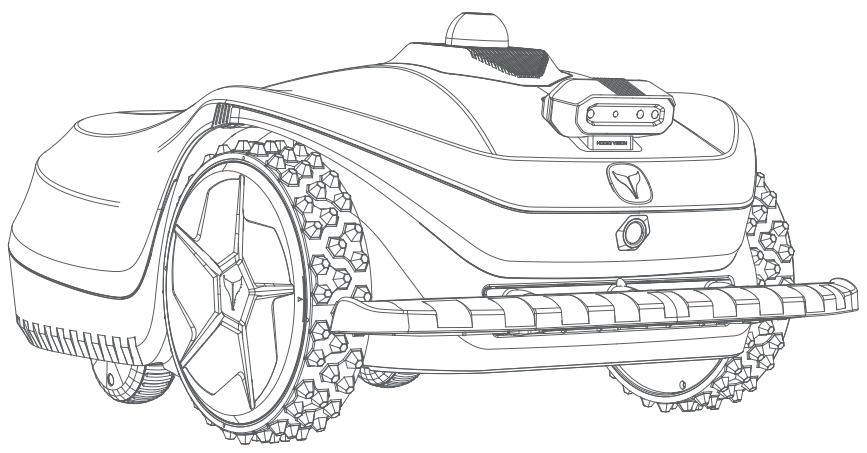

Neomow X 2 *1
(Triple camera is optional)

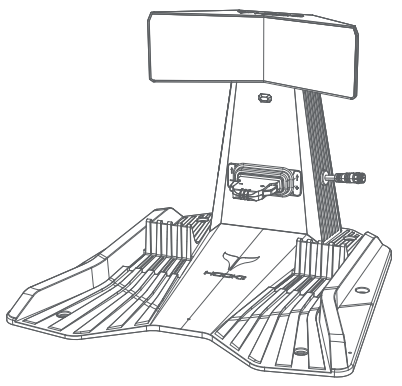

Charging Station *1

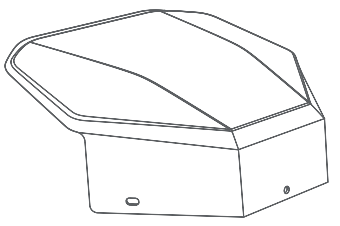

Canopy *1

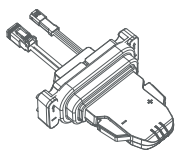

Charging Module *1

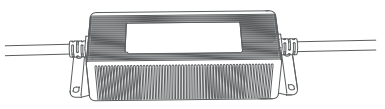

Power Adapter *1

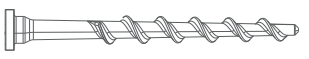

Nails for Charging Station *16

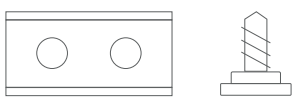

Spare Blade Kit *2
(10 Screws+10 Blades)

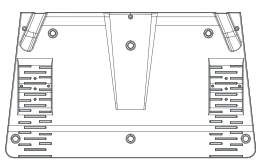

Extended base plate for charging station *1

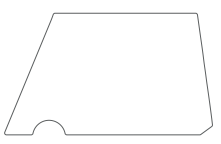

Fixed Charging Station Tape *4

Hex Key *1

Screwdriver *1

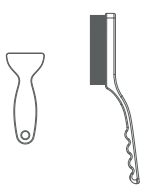

Cleaning Kit *1

User Manual *1

Quick Start Guide *1

Warranty Card *1

UNBOXING PRECAUTIONS

1. Place one hand under the mower's bumper and lift it gently, Raise the mower slightly to create enough space at the rear.

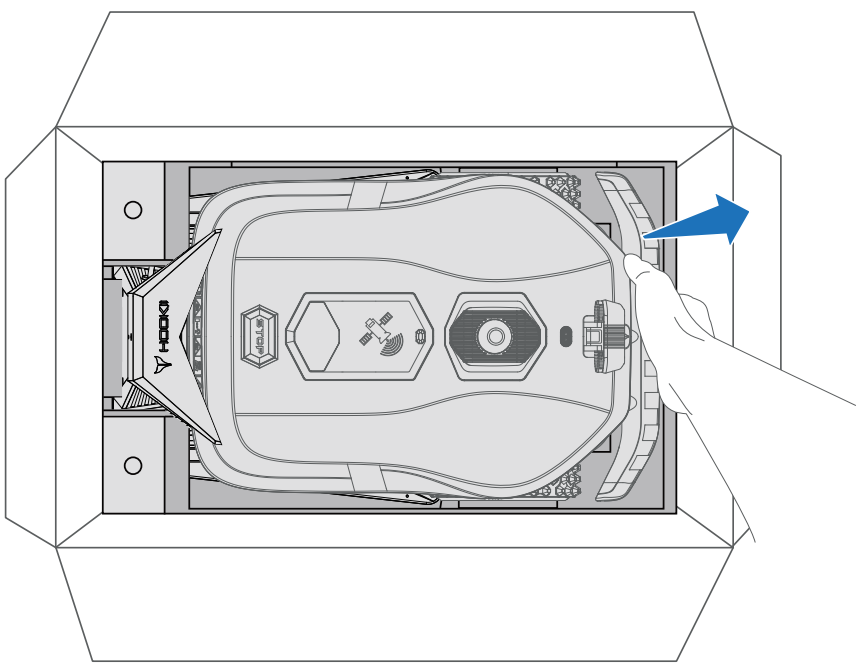

2. Slide your other hand under the mower's rear and lift the mower out of .

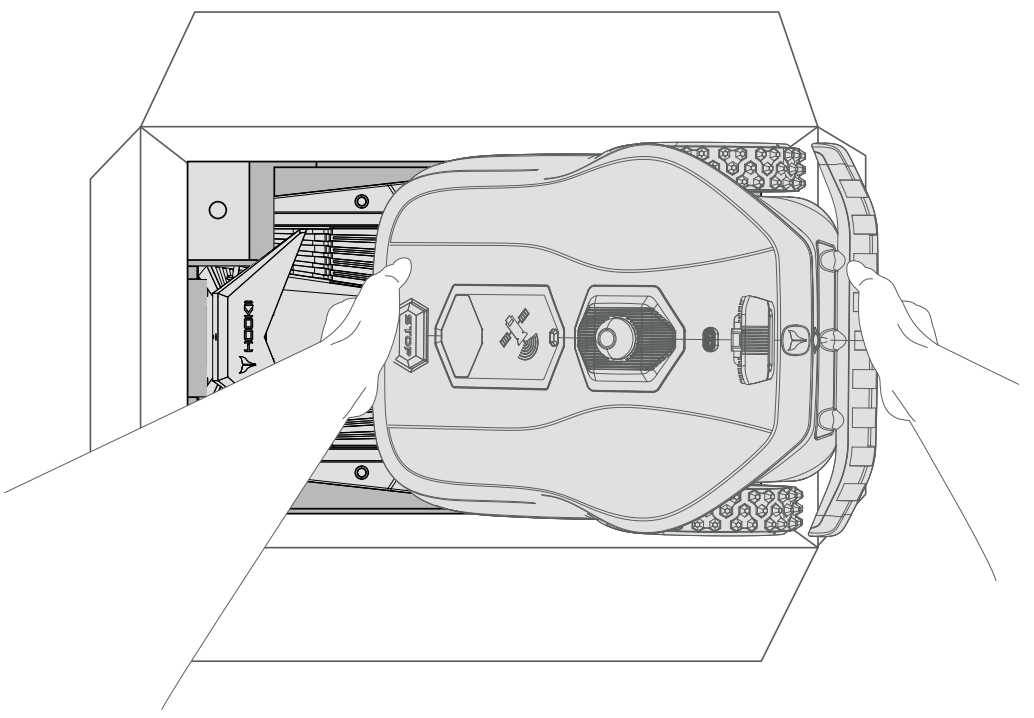

NEOMOW X 2 OVERVIEW

Top View

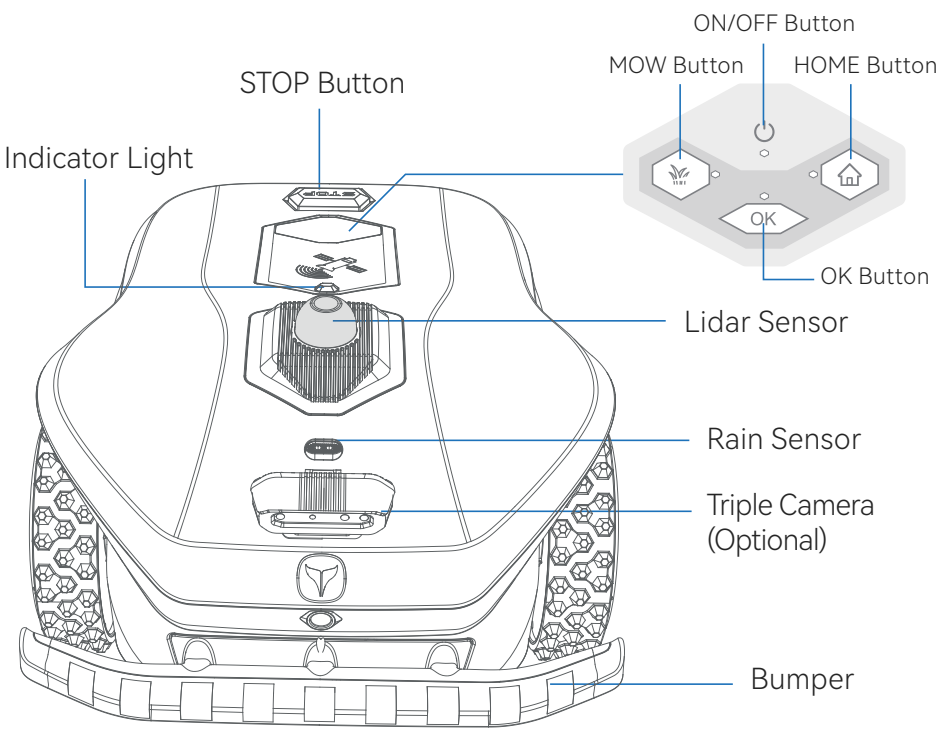

Back View

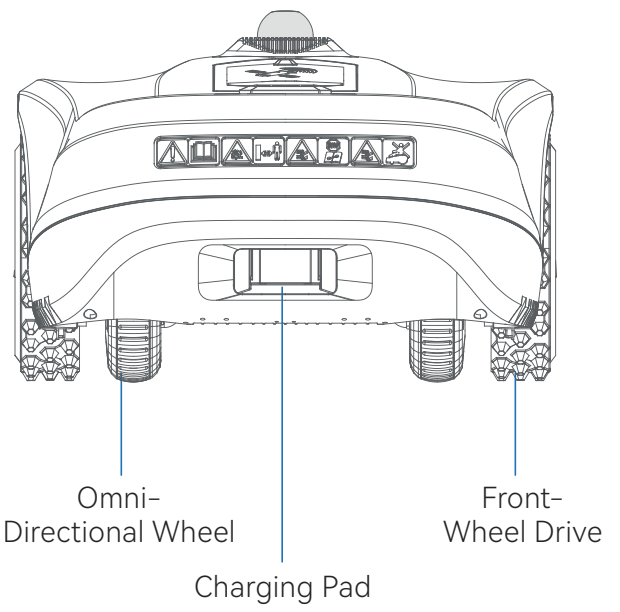

Bottom View

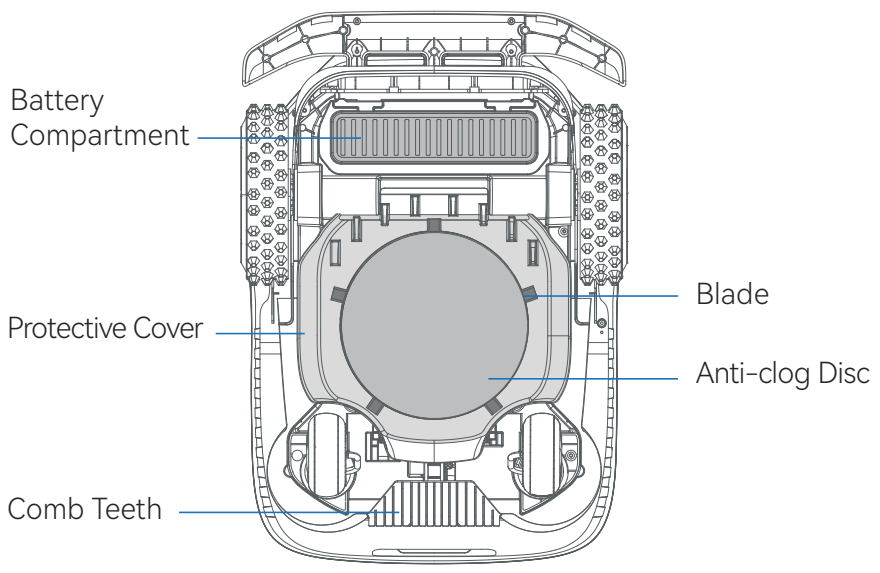

Charging Station Overview

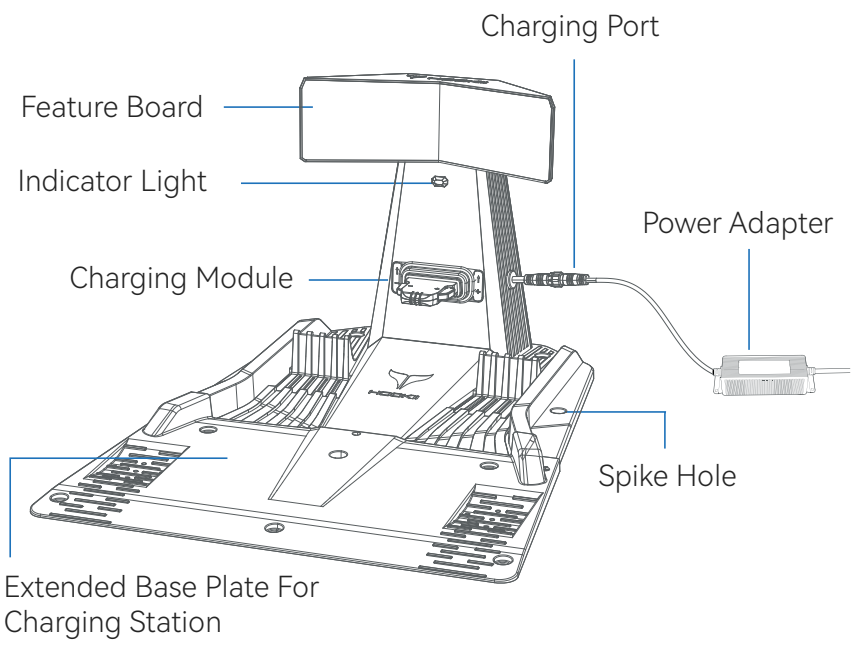

HOW TO USE

STEP 1

Lawn pre-cleaning

1. First, draw a sketch of your courtyard and mark the location of charging station, mowing area, passage, recharge path, and No-Go zone on the sketch for future reference.
2. Clean up debris on the lawn, such as branches, toys, wires, stones, and other obstacles.
3. Fill in the pits on the lawn and level the lawn.
4. Before using the lawn mower, trim your lawn until the lawn height is ≤ 10 cm/4 in.

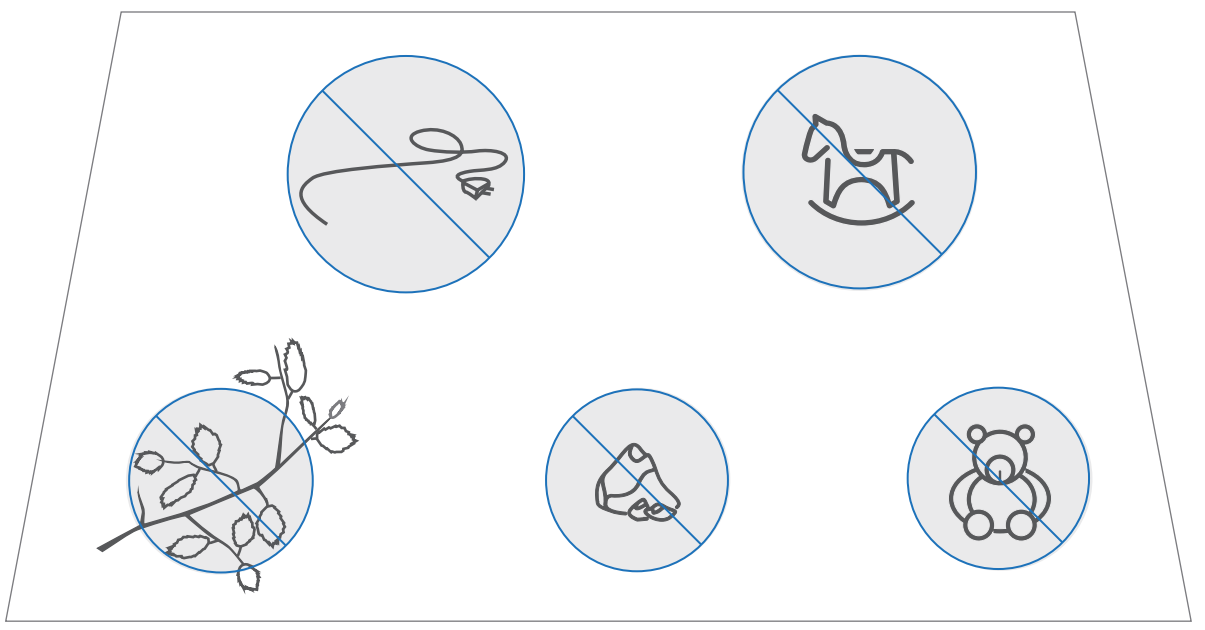

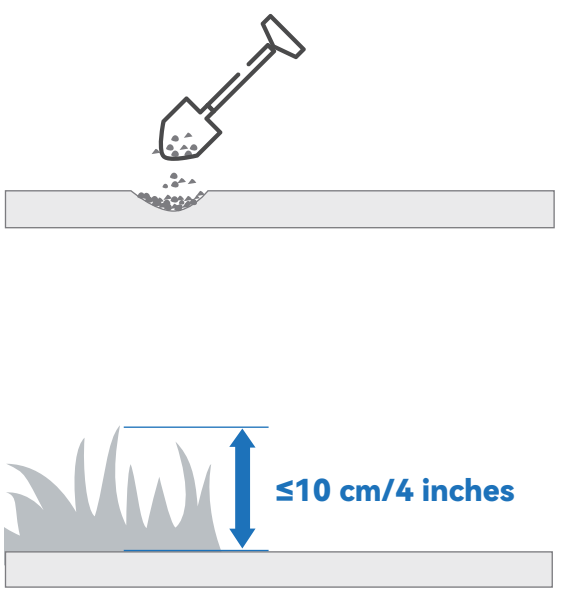

STEP 2

Installing Charging Station

1. Install the charging station on a spacious and flat site.Select a suitable location to install the charging station.

A: Install indoors

Fix the charging station on a flat, clean and hard indoor ground using the tape provided in the package, and then fix the cables.

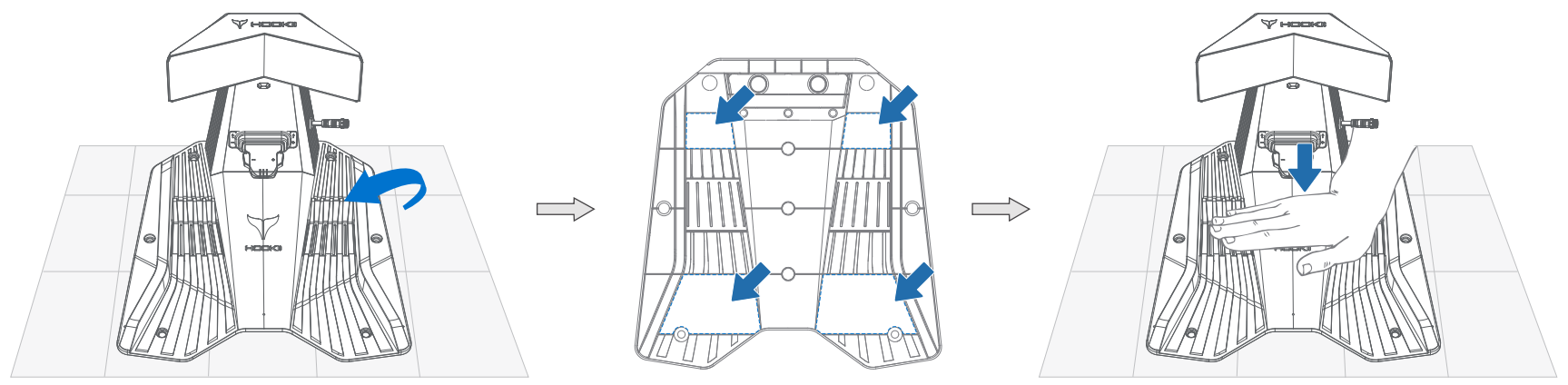

B: Install outdoors

Use the provided nails for charging station to secure the charging station and fix the cable.

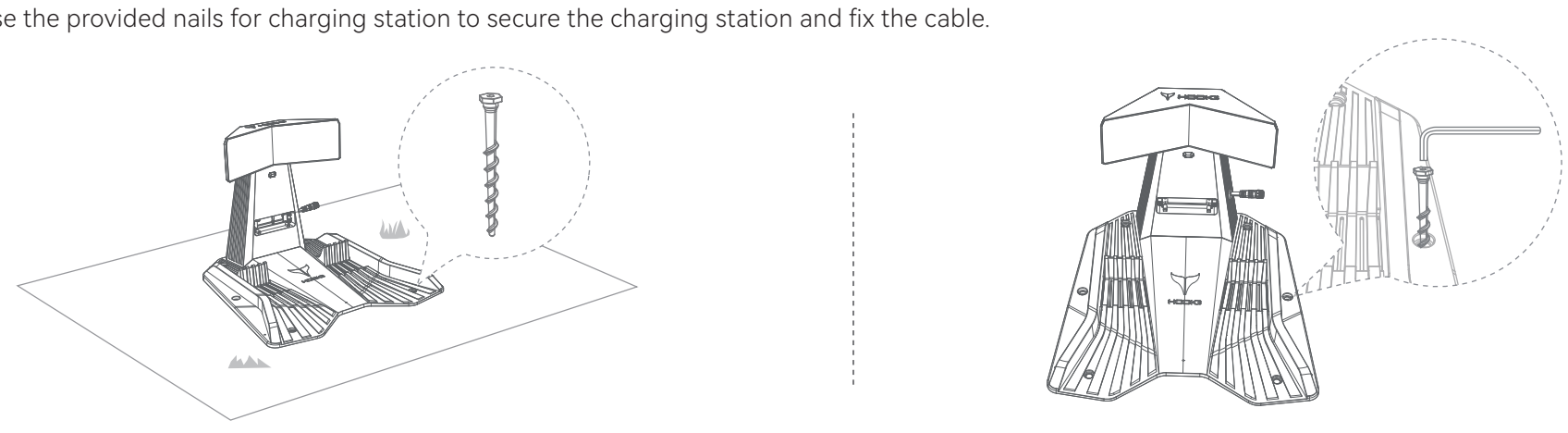

When installing a charging station, reserve 0.5 m of space on each side and 2 m of space in front, keeping the area free of obstacles. The ground within 1.5 m around the charging station and 2 m in front should be flat, with a slope less than 5°.

When installing the charging station outdoors near a wall, maintain a minimum distance of 20 cm between the charging station and the wall to avoid rain affecting the LiDAR.

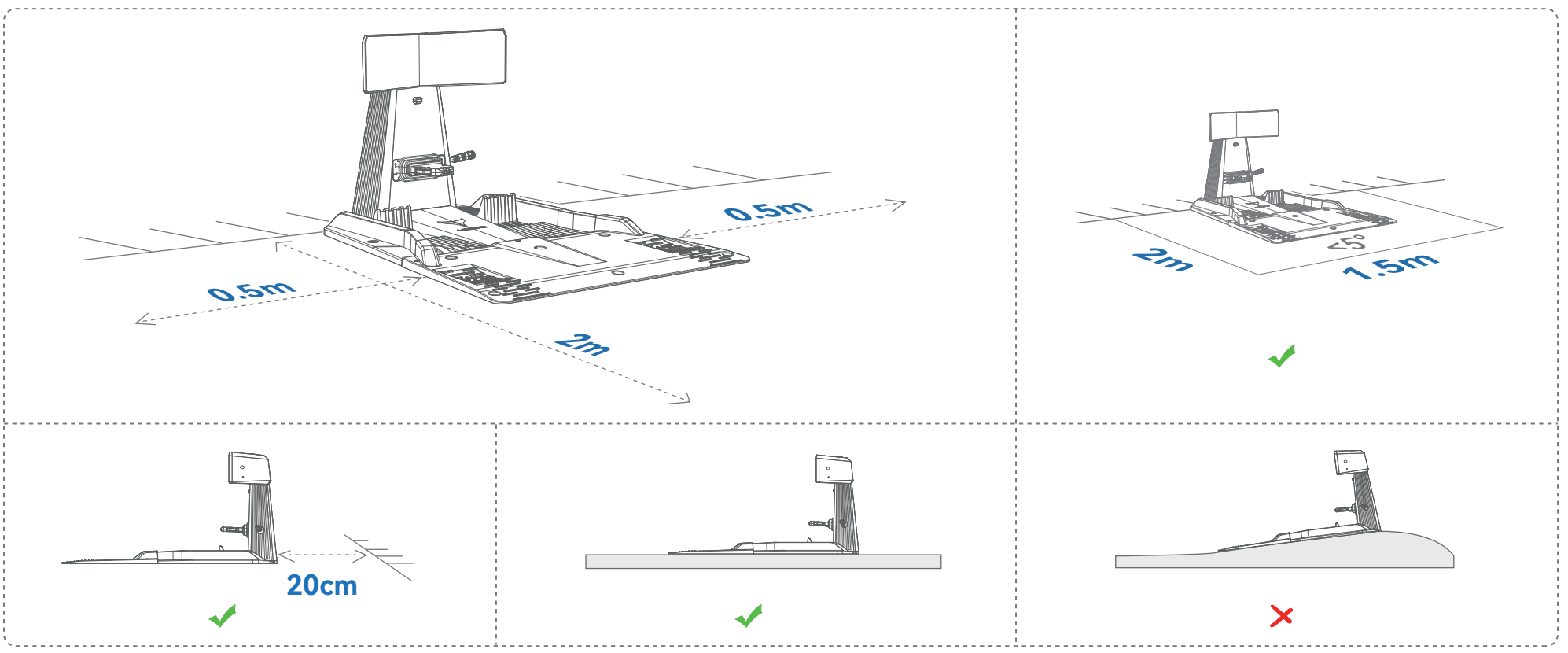

2. Place the charging station in the selected location and connect the power port of the charging station to the power adapter cable. If it is necessary to connect an extension cable, connect power port to the extension cable first, and then connect the power adapter.

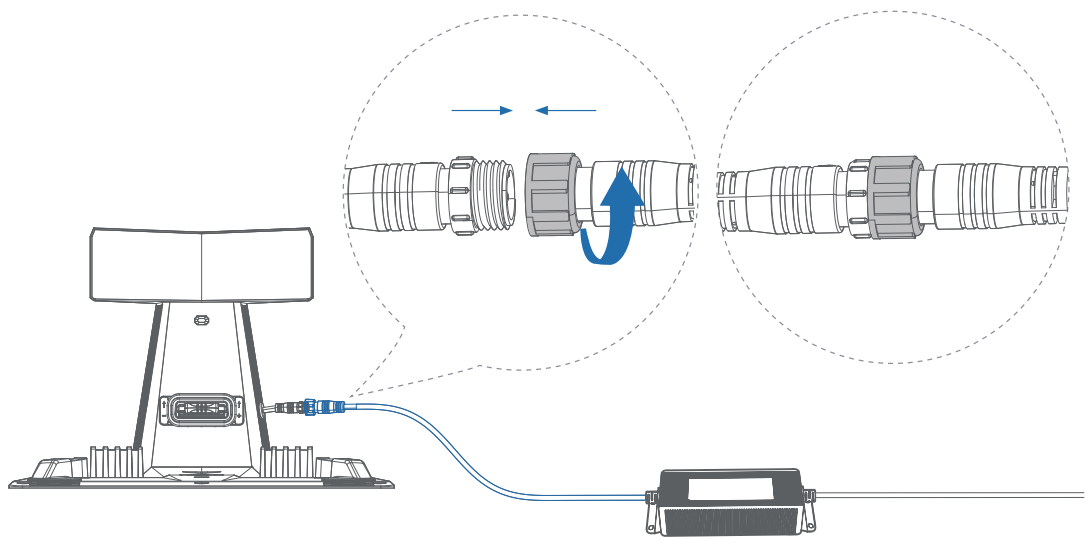

3. Insert power plug into a suitable power socket, and then the indicator light on the charging station will light up.

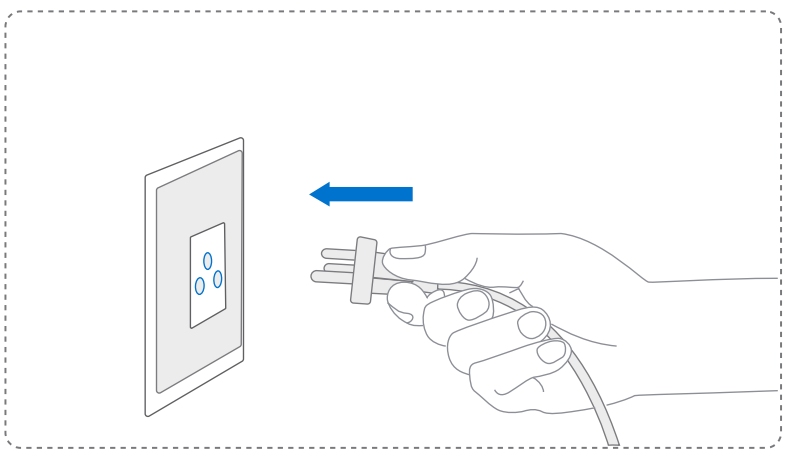

4. Fix the charging station.

CAUTION:

(1) If the installed charging station needs to be moved:
   1) A direct move is possible if the new location is within 20 cm;
   2) If the new location exceeds 20 cm, adjust the recharge path after moving and set the end point to the new new location of the charging station.

(2) Should you require an extra protective shield for the charging station, ensure the shield is over 47 cm high and over 85 cm wide (the width shall be greater than that of the mower, with an additional 15 cm of space reserved on each side).

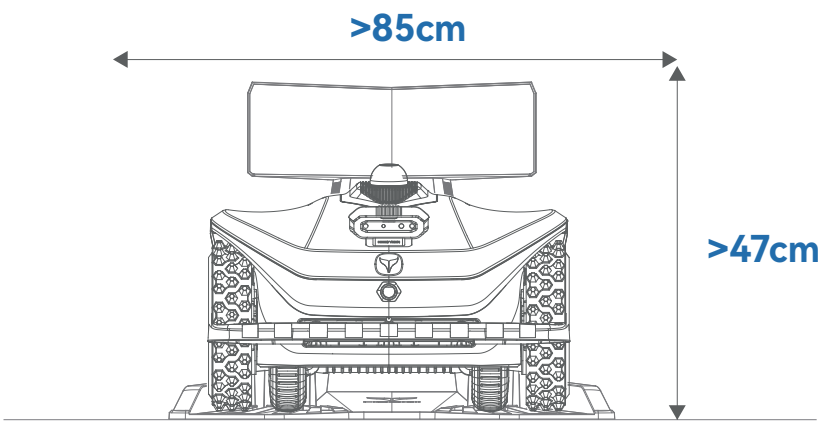

Installation of Charging Module:

(1) Remove the wiring port from the installation slot and connect it to the port of the charging module;

(2) During installation, place the charging module into the installation slot with the arrow mark on the module facing upward;

(3) Use the fixing screws to mount the charging station module onto the charging station;

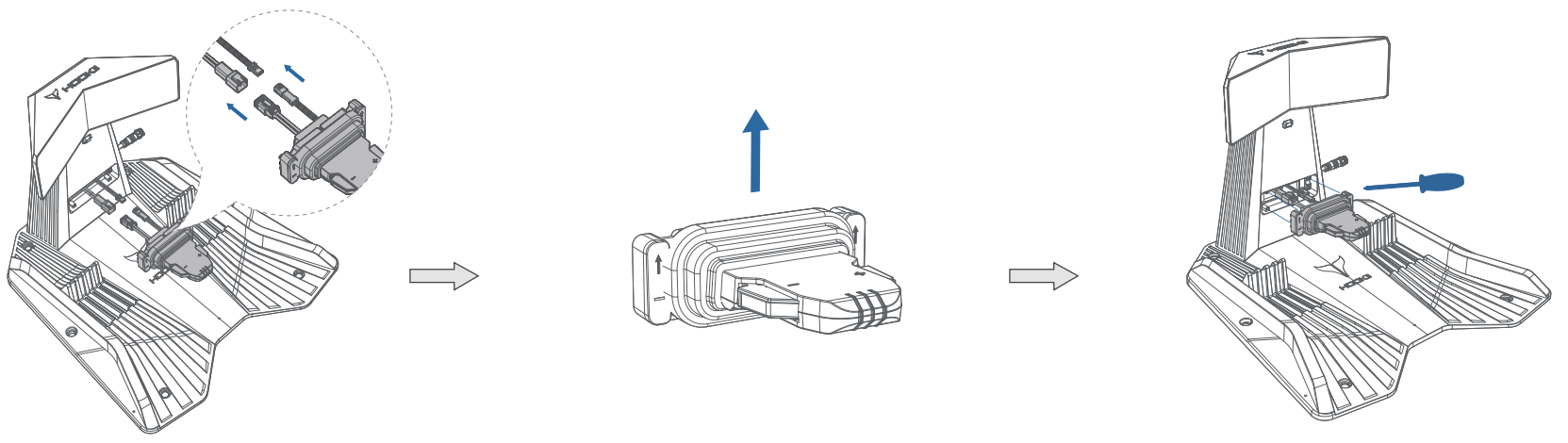

Installation of the Canopy:

(1) Fit the canopy closely to the top of the charging station;

(2) Use a Phillips screwdriver to secure the washers and screws in place;

Caution: When fixing the cable, straighten it directly along the ground.

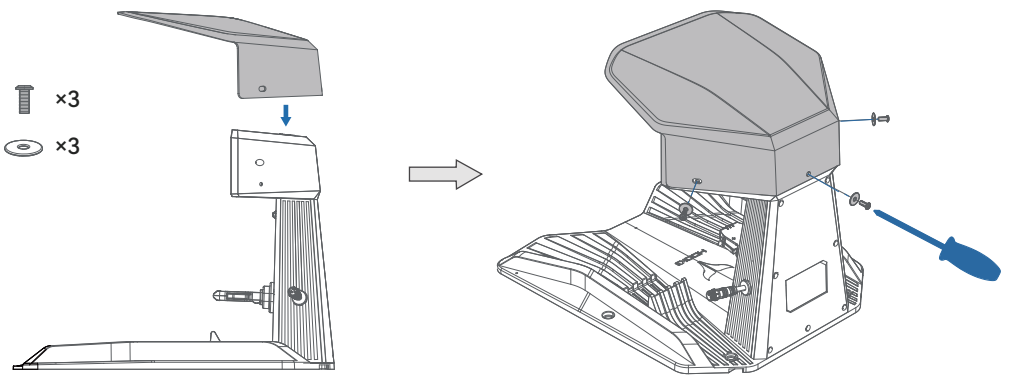

Installing Extended Base Plate For Charging Station

(1) Place the extended base plate directly in front of the charging station, making sure it lines up with the station's front end and sits tightly against it.

(2) Depending on the actual installation site, choose one of the following methods to secure the extended base plate for charging station:
   1) For lawn installation: Secure it to the lawn using the supplied ground spikes.
   2) For uneven hard ground: It is recommended to install an extension plate.
   3) For flat hard ground: Installation of the extension plate is not required.

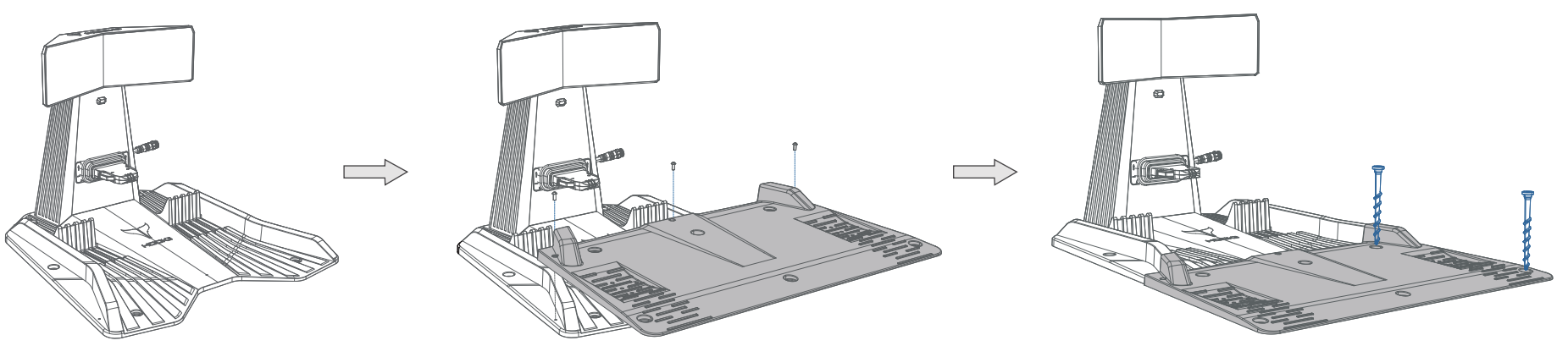

STEP 3

Start Neomow X 2

1. Place Neomow X 2 on the installed charging station.
2. Press and hold the ON/OFF button on the mower to automatically start. During startup, the indicator light will appears blue.
3. When the indicator light turns blue and stays on, it indicates that the startup is completed and the Neomow X 2 can be used normally.

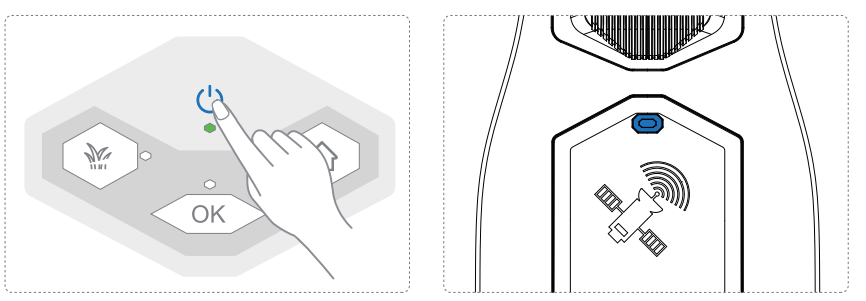

STEP 4

Getting the App

The App, an essential part of a complete experience of lawn mower, should be installed before the use of lawn mower. To ensure successful installation, please scan the QR code below to enter the App market and download HOOKII App for installation. Register and log in after App installation.

Available on the App Store

GET IT ON Google Play

STEP 5 Connecting the Mower, Creating A Map, and Starting Mowing

1. Open your phone's Bluetooth and HOOKII App, and add a mower by following the APP's instructions.

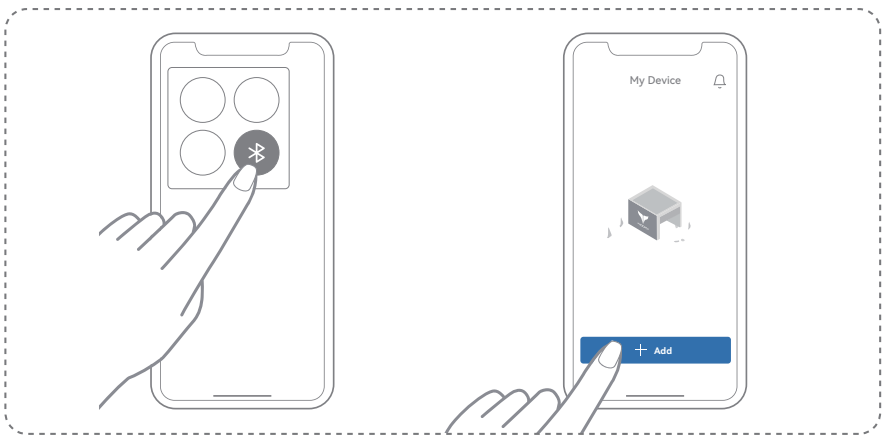

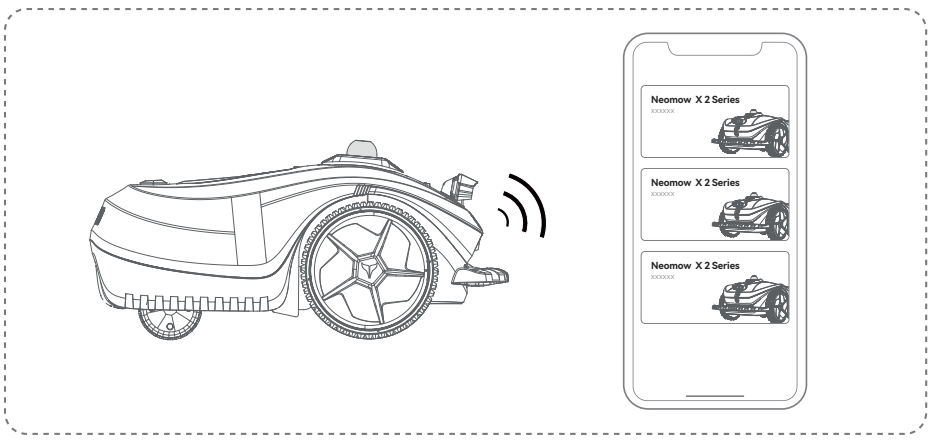

2. Select the connection method. The lawn mower can be connected by a phone in two ways: 4G connection and WiFi connection. When the lawn mower is connected without setting up WiFi connection, 4G connection will be enabled by default. If you want to connect the lawn mower via WiFi, you can set the WiFi name and password on the App to connect the lawn mower to your household WiFi. After setup is finished, the lawn mower will access the internet through WiFi by default.

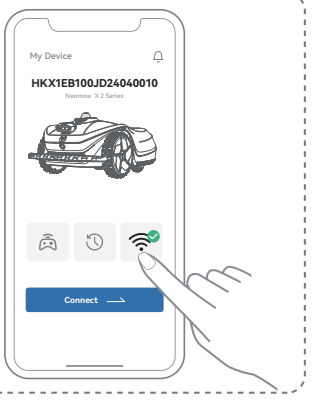

3. Connect the mower and remotely control the robot to create a lawn map, including mowing area, No-Go zone, passage, and recharge path.

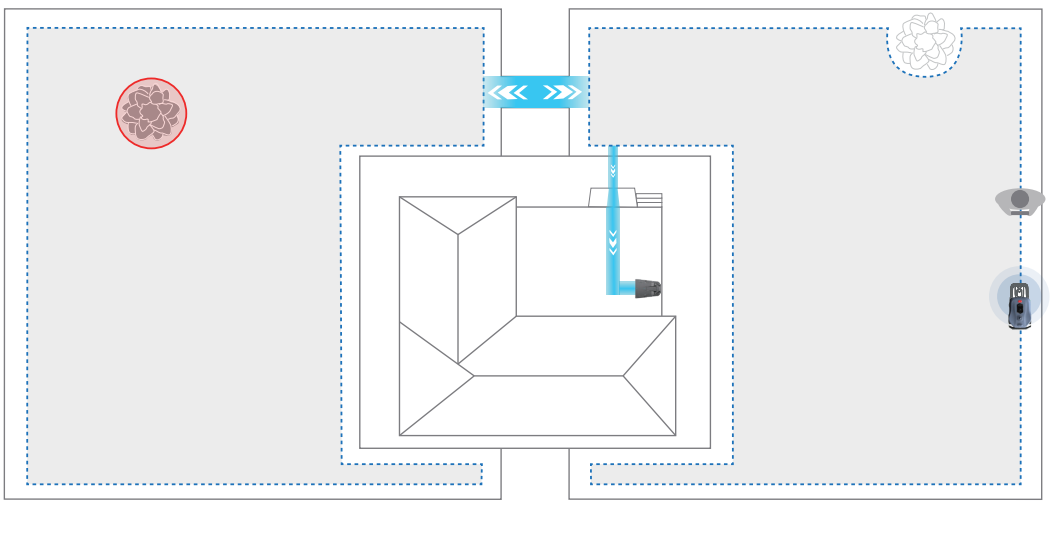

4. After creating the map, click on the button on the APP, and start mowing.

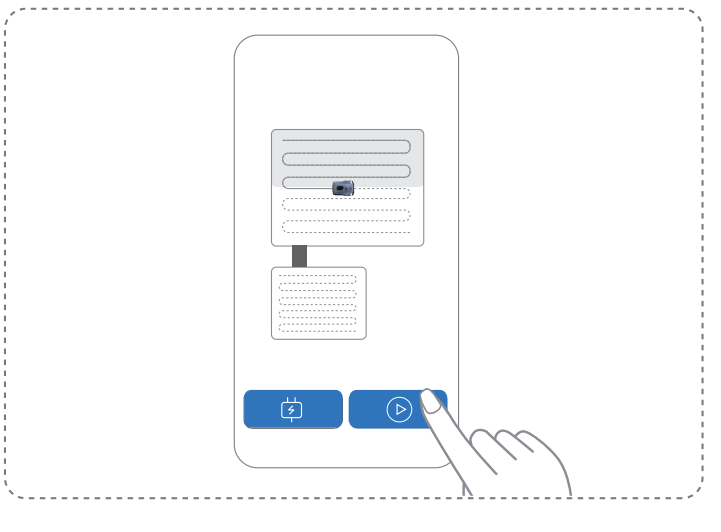

Button Operation

Know The Buttons

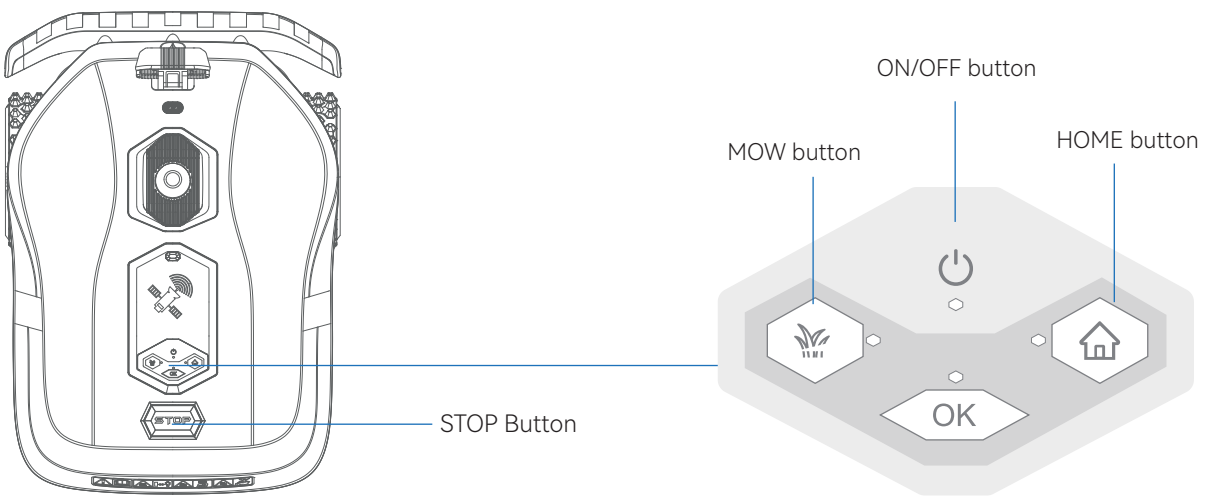

Operating Instructions

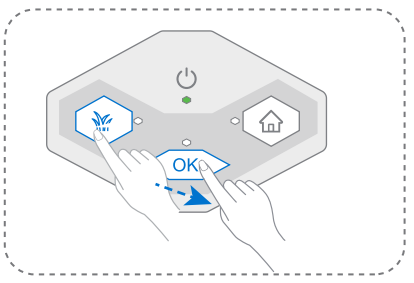

Start Mowing

Press the [Mowing] button + OK button

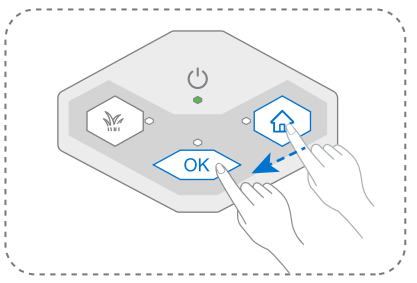

Start Recharge

Press the [Home] button + OK button

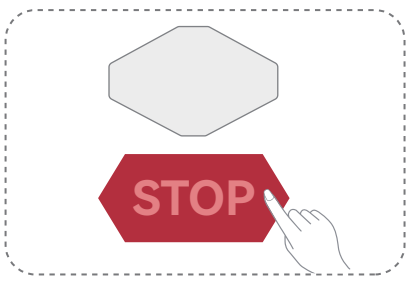

Stop Mowing

Press the STOP button

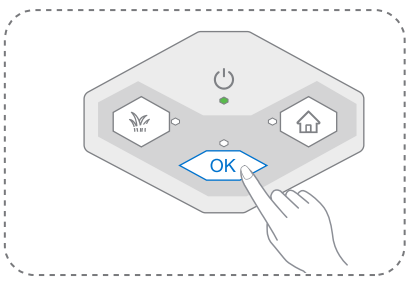

Stop Alarm

Press the OK button

Get Tutorial Videos

(EN) Scan the QR code to quickly view the video on the use of Neomow X 2.

(DE) Scannen Sie den QR-Code, um sich schnell das Video zur Verwendung des Neomow X 2 anzusehen.

(FR) Scannez le code QR pour visionner rapidement la vidéo sur l'utilisation du Neomow X 2.

Get Other Language Versions

(EN) If you need a Quick Start Guide in other languages, please scan the QR code to download.

(DE) Wenn Sie eine Schnellstartanleitung in anderen Sprachen benötigen, scannen Sie bitte den QR-Code, um sie herunterzuladen.

(FR) Si vous avez besoin d'un guide de démarrage rapide dans d'autres langues, veuillez scanner le code QR pour le télécharger.

Social Media

Follow HOOKII for More Information